Indian Journal of Agricultural Sciences **79** (9): 740–4, September 2009

Development and testing of axial-flow groundnut (*Arachis hypogaea*) thresher*

M SINGH[1], G S MANES[2] and SURENDRA SINGH[3]

Punjab Agricultural University, Ludhiana 141 004

Received: 15 December 2008; Accepted: 27 July 2009

Key words: Axial flow, Groundnut, Oilseed crops, Peripheral speed, Thresher

In major portion of India, groundnut (*Arachis hypogaea* L.) is used as edible oil and 72.1% of total agriculture import is of edible oil. It is being promoted for diversification and also has many comparative advantages like manufacturing of colour, shampoo, soap and paper that it offers over rice. Machines have been developed for planting and digging of groundnut crop, but threshing continued to be done manually in India and required about 160–200 man-hr/ha (Kalkat and Verma 1972). Thus, there is a dire need for developing and introducing mechanical threshing of groundnut crop. A lot of work has been done on groundnut threshers in India and abroad. Machine and crop parameters had been studied by the researcher for threshing of Linseed, Pigeonpea and soybean crop (Ramteke and Sirohi 2003, Shirsat *et al.* 2005). Moisture content below 20% was considered best for threshing groundnut but even at this moisture content poor cleaning efficiency (75 to 85%) and high pod loss (3.9 to 6.2%) was reported by researchers (Zaffer *et al.* 1997 and Manes *et al.* 2003). Therefore, it was desired to develop and modify the existing axial-flow thresher for threshing of groundnut crop.

The axial-flow groundnut thresher developed by Punjab Agricultural University, Ludhiana was used for the study (Manes *et al.* 2003). The threshing cylinder had 2 portions, namely threshing and straw throwing. In the first portions, the threshing spikes were mounted, whereas in the second portion (straw ejecting section), the threshing member comprising blades were fitted on the cylinder to throw away the straw. The cylinder had hexagonal shaped cover with 7 louvers attached on it, which made the crop to flow axially. One blower with 2 sieves was provided for separation of lighter material. The machine was evaluated on 'M 522' but had some operational problems. Based on the evaluation results of the machine and modifications suggested, a new prototype was fabricated incorporating the following modifications:

- More thrower loss was observed due to easy sliding of material over the concave made from GI sheet. Therefore, the concave was changed from GI sheet to bar type supported with MS flat.
- The thickness of sieve was increased from 0.7 mm to 1.7 mm and opening size of hole was increased from 20 mm × 50 mm to 24 mm × 50 mm for easy sliding of broken pieces of straw falling through concave and easy passing of pods through the sieve, to reduce sieve overflow.
- Two separate blowers were introduced instead of one to increase the volume of air and to provide uniform airflow to both sieves to increase cleaning efficiency.

Preliminary trials were conducted on the newly fabricated machine and further modifications were incorporated based on preliminary trials as follows.

- Threshing was completed almost in 3/4 part of cylinder and after that it added to more broken straw on sieve thus adding more cleaning load. To avoid this, end of concave was blinded by 175 mm.
- Falling of excess broken straw on the sieve than through thrower was observed due to more number of rotations of material on the cylinder. To avoid such cleaning load, number of louvers was reduced from 7 to 4 alternatively to reduce over threshing.

A brief specification of the new fabricated machine is given in Table 1 and side and front views in Fig 1. The machine was evaluated at research farm of Department of Farm Power and Machinery, Punjab Agricultural University Ludhiana for threshing 'M 522' groundnut during 2005–06. During evaluation the straw-pod ratio varied from 3.5:1 to 5.2:1 (average straw-pod ratio 4.2:1) and moisture content from 15 to 20%.

Effect of 3 levels of operational parameters, i e feed rate (600, 800 and 1,000 kg/hr), cylinder peripheral speed (5.8, 6.4, 7.1 m/s) and concave clearance (30, 36, 42 mm) was studied on various performance parameters of thresher to find best combination of operational parameters. These parameters

*Short note

[1]Ex M Tech student; [2]Research Engineer (email: manesgs@rediffmail.com) Department of Farm Power and Machinery; [3]Project Coordinator (FIM), (email: ssingh5119 @gmail.com), Central Institute of Agricultural Engineering, Bhopal 462 038

Table 1 Specifications of axial-flow groundnut thresher

Parameter	Specification
General	
Type of thresher	Axial flow
Power source	10 hp motor
Overall dimensions (mm)	
Length	2 900
Width	2 200
Height	2 100
Threshing cylinder	
Diameter × length (mm)	422.5 × 1 480
Type and size of pegs (mm)	Flat, 12 mm × 50 mm
Type of concave	Open mess type
Opening size of concave (mm)	41 × 26
Per cent opening area	57
Concave clearance (mm)	30 – 42 (adjustable)
Number of louvers	4
Height of louvers (mm)	62.5
Louvers angle (degree)	13
Cleaning system	
Number of sieve	2
Upper sieve	
Type and size of hole (mm)	Oblong, 24 × 50
Per cent of open (hole) area	63
Lower sieve	Bar type having spacing 6 mm
Blower	
Type and number	Centrifugal, 2
Size of blower, DxL (mm)	460 × 510

were selected based on preliminary trials conducted on the thresher. Thresher was operated with 10 hp electric motor (ç = 82%). Wattmeter and energy meter were used to measure maximum power and average energy consumption respectively. Each experiment was replicated thrice.

Samples were collected from all outlet of the machine for 30 sec. to compute threshing efficiency, cleaning efficiency, grain loss and output of the machine. Different levels of feed rate were maintained by feeding a known quantity of crop (12 kg) manually for predetermined time duration (72, 54 and 43.2 seconds to achieve desired feed rate of 600, 800 and 1,000 kg/hr respectively). The cylinder peripheral speed was varied by using pulleys of different sizes and concave clearance was achieved by introducing 6 mm MS plates at the end of concave mounting. The results were statistically analyzed using Factorial experiments in randomized block design. Analysis of variance was done to test the significant of independent variables and their interaction on dependent variables at 5% level of significance.

The effects of operational parameters on dependent parameters such as threshing efficiency, cleaning efficiency, grain loss (thrower loss, pod breakage and sieve overflow) and output observed during investigations is presented in Table 2.

The threshing efficiency slightly increased with decrease in feed rate, increase in cylinder peripheral speed and decrease in concave clearance. Maximum threshing efficiency of 99.8% was observed at feed rate of 600 kg/hr, cylinder peripheral speed 7.1 m/s and concave clearance of 30 mm (Table 2). The effect of feed rate and cylinder peripheral speed on threshing efficiency was non-significant, whereas of concave clearance was significant at 5% level of significance (value of F ratio and CD at 5% was 12.49 and 0.21 respectively). The interaction of these parameters in pair or combined was also non-significant. The decrease in threshing efficiency from 99.8 to 98.7% with increase in concave clearance from 30 to 42 mm might be due to the fact that as the concave clearance increased, the threshing force on the material for a particular feed rate and cylinder speed decreased due to more space between the concave and spikes of threshing cylinder, resulting in low threshing efficiency. The finding is in line with pervious research conducted on threshers (Kalkat and Verma 1972, Ramtek and Sirohi 2003 and Shirsat *et al* 2005).

The cleaning efficiency decreased with increase in feed rate, whereas no significant effect was observed with change in concave clearance (Table 2). As the cylinder peripheral speed increased from 5.8 to 6.4 m/s the cleaning efficiency increased from 93.4 to 96.1% and then decreased to 91.1% with further increase in cylinder peripheral speed to 7.1 m/s at a feed rate of 600 kg/hr. The effect of feed rate and cylinder peripheral speed was statistically significant (value of F ratio was 3.52 and 21.53 and of CD (P=0.05) was 1.16 and 1.16 respectively), whereas concave clearance was observed non-significant at 5% level of significance. Higher cleaning efficiency of 96.1% was observed at feed rate of 600 kg/hr, at a cylinder peripheral speed of 6.4 m/s and concave clearance of 30 mm.

The decrease in cleaning efficiency from 96.1 to 89.4% with increase in feed rate from 600 to 1 000 kg/hr might be due to the fact that more material was received over sieve at high feed rate ultimately reduced the cleaning efficiency. Increase in speed helped in better cleaning due to higher blower speed and further increase in speed resulted in over threshing of material which leads to high accumulation of small broken pieces of straw and chaff over the sieve. The results were in supports of research conducted by Ahuja (1971) and Shirsat *et al.* (2005).

Thrower loss significantly increased with increase in feed rate, cylinder peripheral speed and concave clearance [value of F ratio was 4.35, 16.53 and 8.17 and of CD (P=0.05) was 0.49, 0.49 and 0.49 respectively]. Low thrower loss of 0.45% was observed at a feed rate of 600 kg/hr and concave clearance of 30 mm, which increased to 1.54% when the cylinder peripheral speed varied from 5.8 to 7.1 m/s (Table 2). High thrower loss of 3.30% was observed at cylinder peripheral speed of 7.1 m/s at a feed rate of 1 000 kg/hr and concave clearance of 42 mm. The increase in thrower loss from 0.45 to 3.30% with increase in feed rate from 600 to

Table 2 Performance results of groundnut thresher

Treatment			Threshing efficiency (%)	Cleaning efficiency (%)	Thrower loss (%)	Broken loss(%)	Sieve over flow (%)	Output (kg/hr)	Specific energy (kWh/q)
Concave clearance (mm)	Feed rate (kg/hr)	Cylinder speed (m/s)							
30	600	5.8	99.5	94.5	0.45	0.45	2.5	113.6	1.29
		6.4	99.7	96.1	0.62	1.09	5.1	122.2	1.49
		7.1	99.8	92.5	1.10	1.32	11.3	106.9	2.50
	800	5.8	99.4	94.2	0.54	0.35	2.3	138.4	1.06
		6.4	99.5	95.5	0.72	0.75	4.2	140.7	1.31
		7.1	99.7	91.8	1.62	0.96	8.5	147.9	1.68
	1 000	5.8	99.2	93.1	0.65	0.15	1.6	158.6	1.05
		6.4	99.4	94.9	0.85	0.70	3.0	163.8	1.25
		7.1	99.5	90.7	1.92	0.82	7.8	162.8	1.60
36	600	5.8	99.1	94.1	0.75	0.34	3.0	109.3	1.27
		6.4	99.4	95.5	0.90	0.75	4.9	114.7	1.59
		7.1	99.5	92.0	1.54	0.88	8.9	117.1	2.01
	800	5.8	99.1	93.5	0.85	0.26	1.9	150.4	1.10
		6.4	99.2	94.6	1.00	0.50	3.8	138.6	1.19
		7.1	99.3	91.1	1.75	0.80	6.7	145.6	1.58
	1 000	5.8	98.9	93.0	1.00	0.15	1.8	155.3	0.94
		6.4	99.1	94.1	1.42	0.45	3.1	171.7	1.17
		7.1	99.2	89.4	2.21	0.64	5.6	154.9	1.55
42	600	5.8	98.9	93.4	1.13	0.33	2.2	120.3	1.10
		6.4	99.1	94.9	1.80	0.58	5.0	108.9	1.30
		7.1	99.3	91.1	1.95	0.80	9.3	111.2	2.07
	800	5.8	98.9	93.0	1.75	0.25	2.0	134.7	1.03
		6.4	99.0	93.6	2.48	0.48	3.3	131.2	1.21
		7.1	99.1	90.5	3.00	0.49	8.6	133.6	1.84
	1 000	5.8	98.7	92.1	2.42	0.13	1.2	168.9	0.78
		6.4	98.9	93.5	3.00	0.38	2.0	156.7	1.04
		7.1	99.0	89.5	3.30	0.40	7.6	177.1	1.26

1 000 kg/hr was due to more crop material in the cylinder that created some hindrance in separation of pods from the straw. The effect of feed rate was more pronounced at higher cylinder peripheral speed and higher concave clearance due to less retention time of crop in the threshing unit and low resistance to material due to more space.

The pod breakage decreased from 1.32 to 0.13% with increase in feed rate from 600 to 1 000 kg/hr, decrease in cylinder peripheral speed from 7.1 to 5.8 m/s and increase in concave clearance from 30 to 42 mm (Table 2). Effect of feed rate, cylinder peripheral speed and concave clearance was statistically significant (value of F ratio was 8.81, 9.47 and 27.90 and of CD (P=0.05) was 0.14, 0.14 and 0.14 respectively) but effect of cylinder peripheral speed was more pronounced. However, their interaction was observed non-significant.

The decrease in pod breakage with increase in feed rate might be due to the fact that the impact of beating force exerted on per unit material was less at higher feed rate because of more crop material around the pods. The increase in pod breakage with increase in cylinder peripheral speed at a particular feed rate might be due to the fact that more impacts of threshing per unit time on the pods resulted in breakage of pods. Increase in pod breakage with decrease in concave clearance was due to the fact that at lower concave clearance, some of the pods might get crushed due to smaller space between the concave and spikes at a particular feed rate. The results were in line with pervious research conducted on threshers (Kalkat and Verma 1972, Anwar and Gupta 1990 and Ramtek and Sirohi 2003).

In general sieve over flow decreased with increase in feed rate, increased with increase in cylinder peripheral speed [value of F ratio was 17.50 and 171.26 and of CD (P=0.05)] was is 0.70 and 0.70 respectively whereas, no significant effect was observed with change in concave clearance and interaction of these parameters was also non-significant at 5% level of significance. Higher sieve over flow of 11.3% was observed at feed rate of 600 kg/hr, which decreased to 7.8% when the feed rate was increased to 1 000 kg/hr at a cylinder peripheral speed of 7.1 m/s and concave clearance of 30 mm (Table 2). The effect of feed rate on sieve overflow was more pronounced at higher cylinder peripheral speed. The low sieve overflow

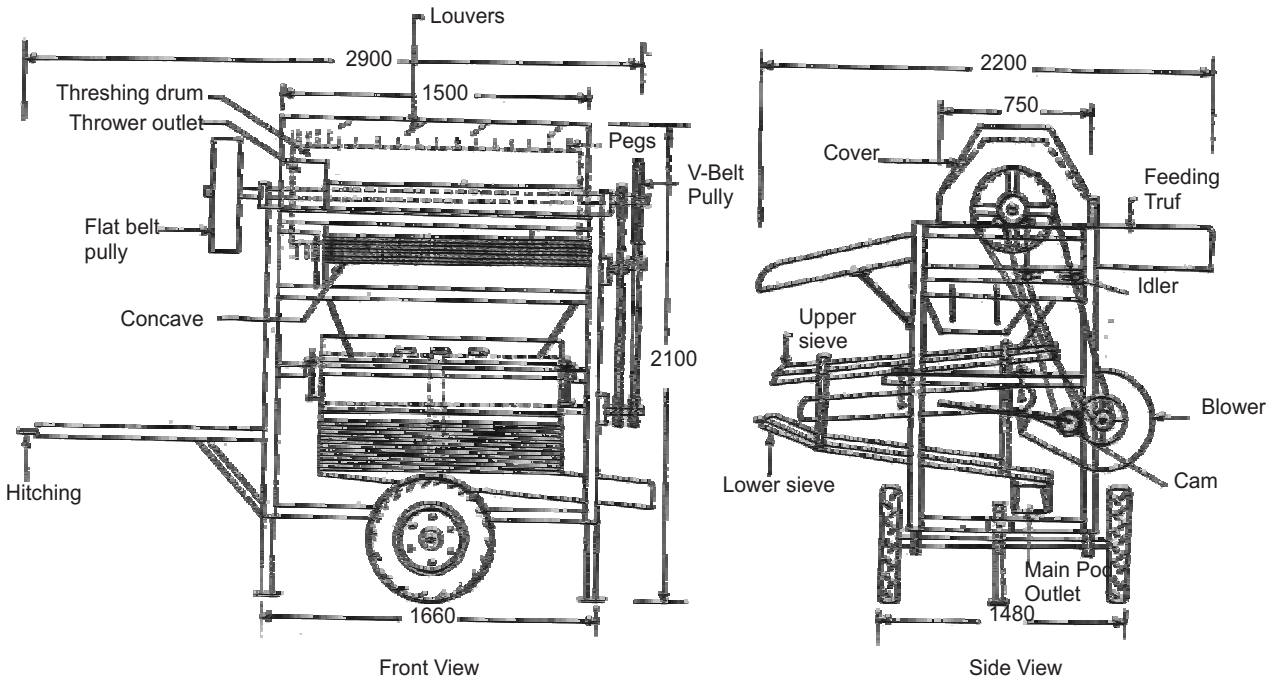

Fig 1 Front and side views of axial-flow groundnut thresher (all dimensions in mm)

of 1.2% was observed at cylinder peripheral speed of 5.8 m/s and concave clearance of 42 mm and feed rate of 1 000 kg/hr. The increase in sieve overflow with increase in cylinder peripheral speed might be due to increase in air-flow rate (blower) as the blower speed was directly proportional to cylinder peripheral speed. The higher blast of air hit the pods out over the sieve, whereas the force exerted by air on individual pod at a particular blower speed became weak at high feed rate due to more pod material on the sieve.

The output capacity significantly increased with increase in feed rate (value of F ratio was 169.27 and of CD was 5.41). It varied from 106.9 to 177.1 kg/hr as feed rate was increased from 600 to 1 000 kg/hr (Table 2). The increase in output with increase in feed rate was obvious because at higher feed rate more crop material was fed per unit time as compared to low feed rate, hence more number of pods were collected at main outlet per unit time. The mean output capacity was 113.8, 140.2 and 163.3 kg/hr at the feed rates of 600, 800 and 1 000 kg/hr respectively The slight variation in output capacity for same feed rate was due to variation in straw-pod ratio which ranged from 3.5:1 to 5.2:1 (average 4.2:1) during the experiment. No effect of cylinder periphera speed and concave clearance on output capacity was observed as the output was function of amount of material fed per unit time.

The specific energy requirement measured using energy meter significantly decreased with increase in feed rate, increased with increase in cylinder peripheral speed and decreased with increase in concave clearance [value of F ratio was 24.83, 4.03 and 71.21 and that of CD (P=0.05)] was 0.12, 0.12 and 0.12 respectively. Specific energy requirement was minimum (0.78 kWh/100kg) at a feed rate of 1 000 kg/hr, cylinder peripheral speed of 5.8 m/s and concave clearance of 42 mm. It was maximum (2.50 kWh/q) at a feed rate of 600 kg/h, cylinder peripheral speed of 7.1 m/s for concave clearance of 30 mm. Power consumption measured using wattmeter varied from 1.4 to 6.0 kW as the feed rate was increased from 600 to 1 000 kg/hr depending upon the corresponding feed rate, cylinder peripheral speed and concave clearance. The peak requirement of power was observed to be 6.0 kW for feed rate of 1 000 kg/hr at a cylinder peripheral speed of 7.1 m/s and concave clearance of 30 mm.

The decrease in specific energy requirement with increase in feed rate might be due to the fact that the proportional power required for threshing additional crop was less due to improvement in appropriate capacity of prime mover used. The increase in specific energy requirement with increase in cylinder peripheral speed might be due to the fact that power consumption increased with increase in rotational speed of cylinder and blower. As the concave clearance increased, the threshing force on the crop material decreased hence, specific energy requirement decreased.

The threshing efficiency, cleaning efficiency and output capacity of the thresher should be high, whereas the pod losses (thrower loss, breakage loss and sieve over flow) and specific energy consumption should be low, are the requirements for a good thresher. Based upon these considerations the best operational parameters for thresher were: feed rate 800 kg/ha, cylinder speed 5.8 m/s and concave clearance 30 mm. At this setting, threshing efficiency was

99.4%, cleaning efficiency 94.2%, thrower loss 0.54%, pod breakage 0.35%, sieve overflow 2.35%, output capacity 138.4 kg/hr and specific energy requirement 1.06 kWh/100 kg.

Increase in concave clearance resulted in decrease in threshing efficiency, pod breakage and specific energy requirement but increase in thrower loss. Increase in cylinder peripheral speed resulted in increase in thrower loss, pod breakage, sieve over flow and specific energy requirement, whereas increase in feed rate resulted in decrease in cleaning efficiency, pod breakage, sieve over flow and specific energy requirement but increase in output capacity and thrower loss. The optimum value of feed rate, cylinder peripheral speed and concave clearance for better performance was observed 800 kg/h, 5.8 m/s and 30 mm respectively.

SUMMARY

Investigations were carried out during 2005–06 on an axial-flow groundnut thresher at different feed rate, cylinder peripheral speed and concave clearance to optimize its operational parameters for better performance. The feed rate of 800 kg/hr, cylinder peripheral speed 5.8 m/s and concave clearance of 30 mm gave best field results for threshing 'M 522' groundnut (*Arachis hypogaea* L.). At this optimum operational setting, threshing efficiency was 99.4%, cleaning efficiency 94.2%, thrower loss 0.54%, pod breakage 0.35%, sieve overflow 2.35%, output capacity 138.4 kg/hr and specific energy requirement 1.06 kWh/q.

REFERENCES

Ahuja S S. 1971. 'Studies on design and operational factors in a mechanical separation system for wheat grain'. M Sc thesis (unpublished) Punjab Agricultural University, Ludhiana.

Anwer M T and Gupta C P. 1990. Performance evaluation of Chickpea thresher in Pakistan. *Agrilcultural Mechanization in Asia, Africa and Latin America* **21** (3): 23–28.

Kalkat H S and Verma S R. 1972. Development and performance evaluation of power operated groundnut thresher. *Journal of Agricultural Engineering* **IX** (1): 50–58.

Manes G S, Garg I K and Sharda A. 2003. Prototype feasibility testing of groundnut thresher. Biannual report of AICRP on Farm Implements and Machinery. Department of Farm Power and Machinery, Punjab Agricultural university, Ludhiana. pp 52–60.

Ramteke A S and Sirohi N P S. 2003. Study of design parameters for threshing of Linseed crop. *Journal of Agricultural Engineering* **40** (2): 39–45

Shirsat N A, Prasad J, Majumdar K L and Verma A K. 2005. Modification and testing of high capacity Pigeon pea (*Cajanus cajan*) thresher. *Proceedings of 'Convention of ISAE'*, held at ANGRAU, Hyderabad.

Zafar A W, Kalwar S A and Anwer M T. 1997. Design and development of FMI axial flow groundnut thresher. *Agrilcultural Mechanization in Asia, Africa and Latin America* **28** (1): 31–34.