Indian J. Fish., 73 (3): 35-44, 2026 doi:10.21077/ijf.2026.73.3.179327-04

Available online at: epubs.icar.org.in/index.php/IJF

The Paadu fishing system of Ennore Creek, India: A case study of community based rotational fisheries management

R. K. Srisanthoshram[1,2*], R. Gopinath[1,2] and N. Dinesh[1,2]

[1]Department of Fisheries Engineering and Technology, Dr. M. G. R. Fisheries College and Research Institute, Ponneri-601 204, Tamil Nadu, India
[2]Tamil Nadu Dr. J. Jayalalithaa Fisheries University, Nagapattinam-611 002, Tamil Nadu, India

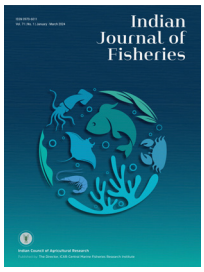

Abstract

Traditional fisheries management systems play a crucial role in regulating access to common aquatic resources, yet the Paadu fishing system of Ennore Creek has remained undocumented. This study documents and analyses the structure, operation, and governance of the Paadu fishing system practised by fishing communities dependent on Ennore Creek, Tamil Nadu, South India. A qualitative approach was employed, combining field observations, fisher interviews, and GPS-based participatory mapping of Paadu fishing grounds. The study identified 60 Paadu fishing grounds, of which 49 are actively used under a rotational access system involving Mugathuvara Kuppam and Kattu Kuppam villages. Gear based differentiation was observed, with stake net shrimp fisheries governed by Paadu rules, while Shivanpadai Kuppam relies exclusively on cast-net fishing without Paadu access. Environmental pressures, including pollution, siltation, and the spread of invasive mussels, were found to affect fishing operations and resource sustainability. Overall, the Paadu system functions as an effective community based fisheries management institution.

*Correspondence e-mail:
ssrmfscno1@gmail.com

Keywords:
Aquatic resources,
Shrimp fishery, Stake net,
Traditional fisheries management

Received : 21.05.2026
Accepted : 13.08.2026

Introduction

Traditional fisheries management practices have historically shaped how access to shared aquatic resources is organised across South Asia. One such system is the Paadu (Padu) fishing system, a locally evolved governance mechanism widely practised in lagoon and backwater fisheries of southern India and Sri Lanka. The system operates through regulated spatial and temporal rotation of fishing locations, enabling fishers to access productive grounds in an orderly manner and thereby reducing competition and conflicts (Mathew, 1991). It is a traditional form of community-based fisheries management in which access to fishing grounds is collectively regulated through customary rules. Fishing rights are allocated to eligible community members based on locally established norms, with governance exercised by village level institutions. The system is designed to ensure equitable access to fishing grounds, regulate fishing effort, prevent conflicts, and sustain lagoon and backwater fisheries. This system is particularly associated with fisheries that employ fixed or passive fishing gears, where spatial regulation is essential to avoid gear overlap and disputes. The system has been most extensively documented in Kerala and Tamil Nadu, with Pulicat Lake representing one of the largest and most studied Paadu managed fisheries in the region. In the Pulicat region alone, approximately 50 fishing villages have historically participated in Paadu-based fishing through spatio-temporal rotation of fishing grounds (Rajagopalan, 2012).

Ennore Creek (Fig.1), in northern Tamil Nadu, is a small backwater ecosystem approximately 2.25 km² with an average width of 400 m. The creek is hydrologically connected to the Kosathalaiyar River and is influenced by both riverine and coastal processes, linking it to the Pulicat system (Rajkumar *et al.,* 2011). Eight fishing villages are situated around Ennore

© 2026 Indian Council of Agricultural Research

Fig. 1. View of Ennore Creek where the Paadu system is practised

Creek. Of these, three villages, namely Mugathuvara Kuppam, Kattu Kuppam, and Shivanpadai Kuppam are directly dependent on the creek for their fishing activities, while the remaining five villages, such as Thazhanguppam, Chinnakuppam, Periyakuppam, Nettukuppam and Ennore Kuppam, primarily engage in marine fishing.

Despite the long standing practice of Paadu based fishing in Ennore Creek, the structure and functioning of this system have remained largely undocumented in formal fisheries literature. Previous research has identified the Paadu system as an important example of community-based fisheries management, where access and use rules are locally defined and enforced. Lobe and Berkes (2004) demonstrated that the Paadu system functions as a customary property rights institution rooted in social norms and collective decision making, enabling communities to regulate fishing effort in the absence of formal state control. However, subsequent studies have shown that increasing environmental stress, market integration, and demographic changes have altered the effectiveness of such systems in several regions, leading to declining compliance and equity (Coulthard, 2011).

Recent literature has also highlighted the social boundaries embedded within Paadu systems. Gender based exclusion remains a significant concern, as women are largely excluded from fishing rights and decision-making processes, with their participation primarily confined to post-harvest activities (Rajagopalan, 2012). Comparative studies from Sri Lanka further suggest that although strong social institutions can support the long term persistence of Paadu systems, they are increasingly challenged by modernisation and ecological degradation (Iwasaki, 2014). In addition, the lack of formal legal recognition continues to undermine the institutional security of customary fisheries management arrangements.

Against this background, the present study addresses a critical gap by providing the first systematic documentation of the Paadu fishing system practised in Ennore Creek. Specifically, the study documents local rules, rotational practices, and operational characteristics of Paadu based fishing, and examines their role in conflict management and resource sustainability within the creek fishery.

Materials and methods

Study area

The study was conducted during 2023 in Ennore Creek, a backwater ecosystem located in northern Tamil Nadu, India, which supports small scale fisheries governed by the traditional Paadu fishing system. Ennore Creek forms part of a larger lagoon-estuarine complex influenced by both riverine and coastal processes. The creek serves as an important source of livelihood for local fishing communities.

Data collection

A qualitative research design was adopted to document the structure, operation, and governance of the Paadu fishing system and its role in sustaining local livelihoods. Primary data were collected through informal interviews and participatory field observations with experienced fishers actively involved in Paadu fishing. The vernacular names used in this article are Tamil names that were locally used by fishers to denote their gear types and Paadu fishing sites.

Approximately 25–30 fishers from the study villages participated in the data collection process. Interviews were conducted with the support of village leaders and panchayat representatives to facilitate community engagement and ensure accuracy of information. Verbal consent was obtained from all participants before data collection, and participation was entirely voluntary.

Mapping of Paadu fishing grounds

Field surveys were conducted for a period of 20 days. During the first 15 days, detailed information was collected on the number and location of Paadu fishing grounds, fishing schedules, types of stake nets used, and operational challenges faced by fishers.The geographic locations of individual Paadu were geo-referenced using GPS-enabled mobile devices while travelling by fishing boat alongside local fishers. This participatory approach ensured accurate identification and validation of Paadu names and locations based on fishers' local knowledge. The recorded coordinates were subsequently plotted using the My Maps feature of Google Maps to generate a spatial representation of Paadu fishing grounds. Mapping activities were conducted during morning hours to avoid obstruction from deployed stake nets and to prevent interference with ongoing fishing operations. An interactive Google My Maps link is provided as supplementary material to enable access to the precise geographic locations of individual Paadu fishing grounds.

Gear documentation

Information on the types of stake nets used under the Paadu system, including their dimensions, materials, and modes of operation, was documented through direct field observation and fishers' traditional ecological knowledge. Quantitative data on the number of floats and sinkers associated with the stake nets were not recorded during the study period, as they vary based on the size of the net.

Data analysis

The final five days of the study period were devoted to organising, verifying, and analysing the collected data. Qualitative information was analysed descriptively to identify patterns related to Paadu allocation, fishing practices, gear use, and conflict management among fishing villages. All schematic figures included in this study were initially hand-drawn on A4 sheets based on field observations and fisher descriptions. The drawings were then photographed and digitally edited to improve clarity, labelling, and readability for publication.

Results

Distribution of Paadu fishing grounds in Ennore Creek

The study documented a total of 60 Paadu fishing grounds within Ennore Creek. Each Paadu represents a distinct fishing site allocated for stake-net operations under a rotational access system (Fig. 2). An interactive Google My Maps link is provided to enable access to the precise geographic locations of individual Paadu fishing grounds (https://www.google.com/maps/d/u/0/edit?mid=1zZIIntIULL10MQB-4U65roUOFteE7wo&usp=sharing).

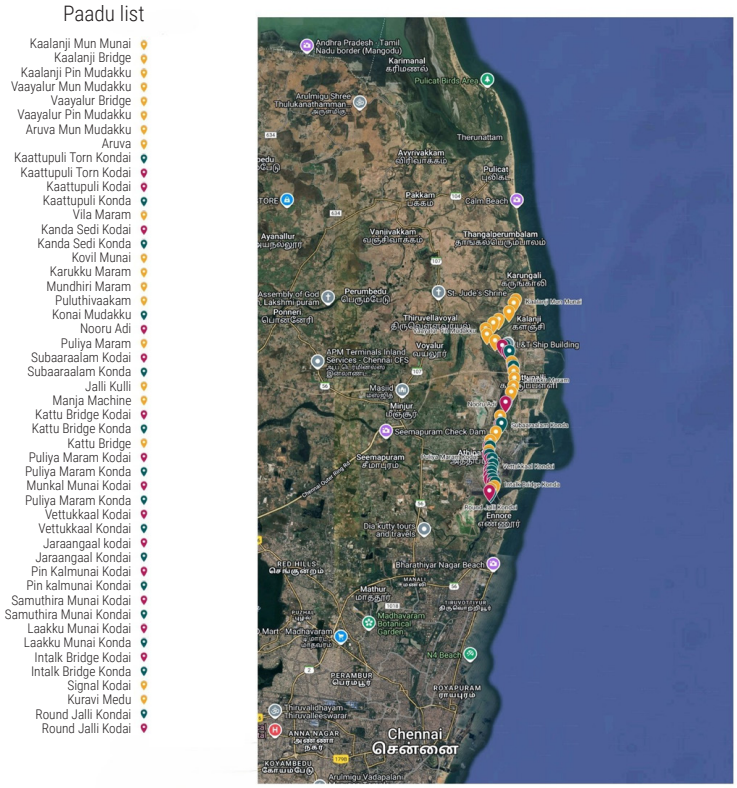

Fig. 2. Spatial distribution of Paadu fishing grounds in Ennore Creek, showing left-side (maroon), right-side (dark green), and non-divided (mild orange) Paadu areas
Credits: Map data ©2024 Imagery ©2024 TerraMetrics

Village-wise participation in the Paadu system

The village-wise participation of Mugathuvara Kuppam and Kattu Kuppam in Paadu fishing system is presented in Table 1. Mugathuvara Kuppam has 61 registered large boats; however, only 41 fishers hold active Paadu allocations at any given time, while the remaining members are placed on a waiting list and gain access to fishing grounds through the rotational allocation system. In contrast, Kattu Kuppam operates approximately 60 boats, corresponding to the number of active *Paadu* fishing grounds (Table 2), thereby enabling one boat to be allocated to each *Paadu* during fishing operations.

Rules and rotational allocation of Paadu

The Paadu system follows a rotational allocation mechanism, wherein fishing rights are assigned annually through a raffle conducted in January. Each Paadu is allotted to fishers who hold a valid membership in the fishers' association of the respective village. All eligible fishers are granted access to every Paadu in a rotational sequence throughout the tenure of the system. To illustrate the rotation mechanism, if three fishers (A, B, and C) are assigned to three Paadu fishing grounds (1, 2, and 3), fishers A, B, and C will operate in Paadu 1, 2, and 3, respectively, on the first fishing day. On the subsequent fishing day, fishers A, B, and C will shift to Paadu 2, 3, and 1, respectively. This rotation continues systematically until the end of the Paadu tenure.

The total operational area under the Paadu system extends approximately 13–14 km. Each Paadu varies in length from 100 to 300 m, and only one boat is permitted per Paadu per fishing day, typically operated by two to three fishers. Fishing between Mugathuvara Kuppam and Kattu Kuppam alternates daily, ensuring equitable access and avoiding overlap of fishing activities. For example, if fishers from Mugathuvara Kuppam operate on Monday, Wednesday, Friday, and Sunday, fishers from Kattu Kuppam operate on Tuesday, Thursday, and Saturday.

The specific rules governing the Paadu system are as follows:

- Fishers from Shivanpadai Kuppam are permitted to use cast nets in the peripheral areas of paadu fishing grounds, provided that these activities do not interfere with stake nets operated by fishers from Mugathuvara Kuppam or Kattu Kuppam.

Table 1. Village-wise participation in the Paadu fishing system

Parameters	Mugathuvara Kuppam	Kattu Kuppam
Total men population	364	541
Total women population	485	645
Society members (Men)	178	268
Society members (Women)	279	355
Number of boats	61	120
Number of large boats	61	70
Number of small boats	NA	50
Number of motorised boats	61	70
Number of non-motorised boats	NA	30
Catch per month (Total catch)	23.4 t	27.3 t
Number of Paadu	41+15 Paadu (15 fishers on a waiting list who gain access to fishing grounds through a rotational allocation system.)	60

Table 2. Village-wise list of Paadu fishing grounds in Ennore Creek, indicating active and inactive Paadu

No. of Paadu	Mugathuvara Kuppam	Kattu Kuppam
1.	Mun Kaalanji	Kaalanji Mun Munai
2.	Kaalanji	Kaalanji Bridge
3.	Mun Kuda	Kaalanji Pin Mudakku
4.	Pin Kuda	Vaayalur Mun Mudakku
5.	Vaayalur	Vaayalur Bridge
6.	Otha Panamaram	Vaayalur Pin Mudakku
7.	Pin Muna	Aruva Mun Mudakku
8.	Mun Kattu	Aruva
9.	Kenda Sedi	Kaattu Puli Torn Kondai
10.	Kaattu Puli	Kaattu Puli Torn Kodai
11.	Vilaa Maram	Kaattu Puli Kondai
12.	Perattha Kattu	Kaattu Puli Kodai
13.	Aimbaadai	Vila Maram
14.	Munthiri Munai	Kanda Sedi Konda
15.	Puludhi Vaakkam	Kanda Sedi Kodai
16.	Pazhankaal	Kovil Munai
17.	Kaldurai	Karukku Maram
18.	Subaaraalam Kaccha Mel	Munthiri Maram
19.	Subaaraalam Kodai Mel	Puluthi Vaakam
20.	AilliKuli	Nooru Adi
21.	Ainthal Pallam	Konai Mudakku
22.	Oyer Kampi Kaccha Mel	Puliya Maram
23.	Oyer kampi Kodai Mel	Subaaralam Konda
24.	Peratha Bridge	Subaalaram Kodai
25.	Pottu Palavai Kaccha Mel	JalliKulli
26.	Munkal Paadu KodaiMel	Manja Machine
27.	Munkal Paadu Kaccha Mel	Kattu Bridge Konda
28.	Pin kal Paadu KodaiMel	Kattu Bridge Kodai
29.	Pin kal Paadu Kaccha Mel	Kattu Bridge
30.	Pin kal Paadu Kodai Mel	Puliya Maram Konda
31.	Vettana Kaal Kaccha Mel	Puliya Maram Kodai
32.	Vettuna Kaal Kodai Mel	Munkal Munai Kondai
33.	Karukkumaran Kaccha Mel	Munkal Munai Kodai
34.	Karukkumaran Kodai Mel	Vettukkal Kondai
35.	Ulpaasi Kaccha Mel	Vettukkal Kodai
36.	Ulpaasi Kodai Mel	Jamarangaal Kondai
37.	Koosam Kaccha Mel	Jamarangal Kodai
38.	Koosam Kodai Mel	Kalmunai Kondai
39.	Signal	Kalmunai Kodai
40.	Kaikaatti	Samuthira Munai Kondai
41.	VNC	Samuthira Munai Kadai
42.	-	Laakku Munai Kondai
43.	-	Laakku Munai Kodai
44.	-	Intalk Bridge Kondai
45.	-	Intalk Bridge Kodai
46.	-	Signal Kodai
47.	-	Rail Vela Bridge Kodai*
48.	-	YaanaiPaaduKondai*
49.	-	YaanaiPaaduKodai*
50.	-	BungalowVaasalPadi*
51.	-	Salt BungalowPaadu*
52.	-	Hostel Paadu*
53.	-	KuraviMedu
54.	-	Round JalliKondai
55.	-	Round JalliKodai
56.	-	Vanda MunaiKondai*
57.	-	Vanda MunaiKodai*
58.	-	KottaMunai*
59.	-	SavukkuMaramKuli*
60.	-	PathuKannu*

A total of 60 Paadu fishing grounds were identified in Ennore Creek, of which 49 were actively used during the study period, while 11 remained inactive (indicated with *)

- Fishers seeking Paadu allocation must register their names on the first day of any month before 30 June of the operational year. Vacant Paadu, arising due to non-operation by registered fishers, are reallocated from the subsequent month.
- The owner of a Paadu is required to be present at the fishing ground by 17:00 hrs. In the event of non-attendance, the Paadu may be temporarily reassigned for that day to another fisher from the same village, without affecting the owner's long term rights to the fishing ground.
- Unauthorised setting of stake nets within a Paadu allocated to another village on its designated fishing day is prohibited. Any fisher found operating stake nets in a neighbouring village's Paadu without prior permission is liable to a penalty of ₹5,000.
- Participation of non-villagers or non-locals in fishing activities within Paadu fishing grounds is strictly prohibited. Violation of this rule may lead to cancellation of Paadu ownership for one year.
- In the event of damage to a Paadu owner's boat, the owner is permitted to use a boat belonging to another fisher from the same village for a maximum of two consecutive Paadu operations.
- If a Paadu owner is unable to participate in fishing activities due to health-related reasons, the fishing rights may be temporarily delegated to fellow villagers for a maximum of five Paadu operations during the tenure.
- Paadu fishing operations are suspended during floods, heavy rainfall, cyclones, and major festivals such as Deepavali, Pongal, and the Tamil New Year.

Gear characteristics used in Paadu system

Stake nets are the primary fishing gear used under the Paadu system. Three types of stake nets were recorded: Suthu (Surround) valai (Net) (Fig. 3), Konda (Hair bun) valai (Fig. 4), Thoori (Like bag net) valai (Fig. 5), and one auxiliary stake net, Thadukku (Block) valai (Fig. 6). These nets vary in length from 25 to 65 feet and in height from 7 to 20 feet, depending on type. Nets are typically supported by 21–23 wooden stakes and are designed for shrimp filtration. Materials used include cotton and polyethylene, with mesh sizes ranging between 14 and 18 mm (Table 3).

Craft operations

Fishing operations are conducted using both motorised and non-motorised boats. Mugathuvara Kuppam operates 61 motorised boats, while Kattu Kuppam uses a combination of motorised and non-motorised crafts (Table 4).

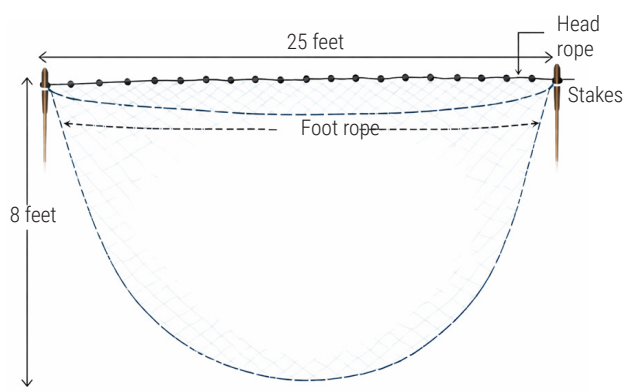

Fig. 3. Schematic representation of Suthu valai (stake net) used under the Paadu fishing system.

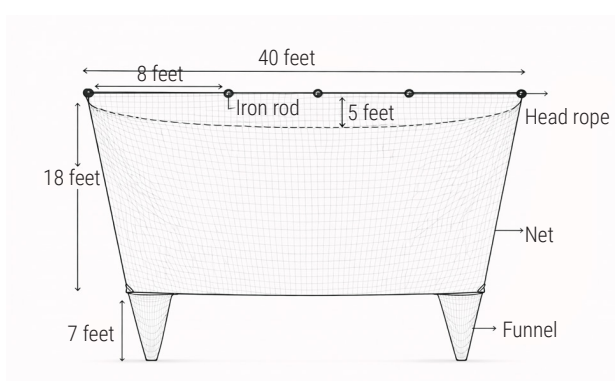

Fig. 4. Schematic representation of Konda valai (stake net) used under the Paadu fishing system.

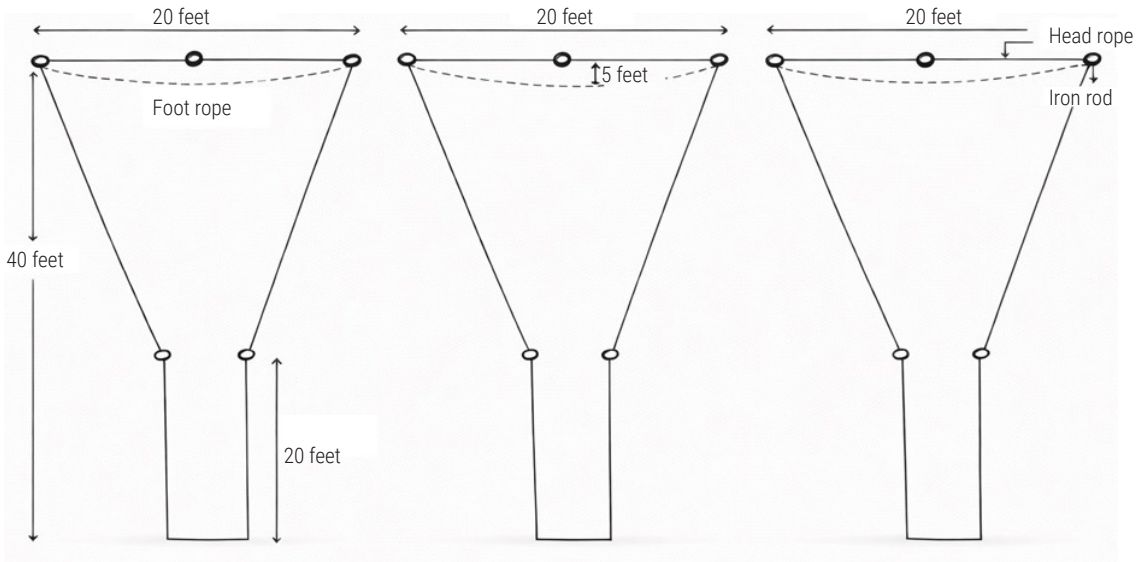

Fig. 5. Schematic representation of Thoori valai (stake net) used under the Paadu fishing system

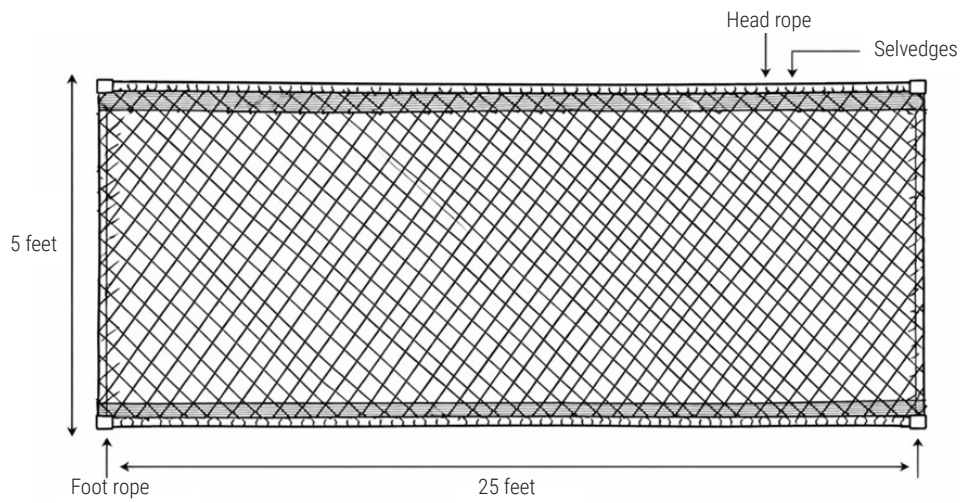

Fig. 6. Schematic representation of Tadukku valai, an auxiliary net used in stake net fishing under the Paadu system

Table 3. Gear characteristics used under the Paadu fishing system in Mugathuvara Kuppam and Kattu Kuppam villages

Parameter	Mugathuvara Kuppam	Kattu Kuppam
Type of gear	Stake net (Pattu nool valai)	Stake net (Suthu valai, Konda valai, Thoori valai)
Material used	Cotton	Cotton; polyethylene (PE)
Mesh size	Upper net: 18 mm; Lower net: 16 mm Upper net: 16 mm; Lower net: 14 mm	Upper net: 18 mm; Lower net: 16 mm Upper net: 16 mm; Lower net: 14 mm Upper and lower nets: 16 mm
Net dimensions	Pattu nool valai: 30–65 ft length × 7–10 ft breadth Tadukku valai: 25 ft length × 5–7 ft height	Suthu valai: 30–65 ft length × 7–10 ft breadth Konda valai: 40 ft length × 18 ft breadth (with funnel extension of 7 ft during high shrimp abundance) Thoori valai: 40 ft length × 20 ft breadth
Number of stakes	21–23	21–23
Number of floats	Not measured	Not measured
Number of sinkers	Not measured	Not measured
Target species	Shrimp	Shrimp

Table 4. Craft characteristics used by fishers in Mugathuvara Kuppam and Kattu Kuppam villages

Parameter	Mugathuvara Kuppam	Kattu Kuppam
Total number of boats	61	120
Number of small boats	NA	50
Number of large boats	61	70
Dimensions of small boats	18–20 ft length × 5 ft breadth	18–20 ft length × 5 ft breadth
Dimensions of large boats	30 ft length × 5–5.5 ft breadth	28–32 ft length × 5–6 ft breadth
Engine fuel type	Diesel	Petrol and diesel
Engine manufacturers	Greaves (diesel)	Honda, Greaves (petrol and diesel)
Engine type used in small boats	Diesel	Petrol
Engine type used in large boats	Diesel	Diesel
Engine horse power (small boats)	10 hp	5 hp (petrol)
Engine horsepower (large boats)	10 hp	10 hp
Fuel consumption per trip	5–10 l	5–10 l
Fuel efficiency	4–5 km l^{-1}	4–5 km l^{-1}

Fishing operation and catch composition

Stake nets are passive filter-type fishing gears commonly employed in estuarine and tidal waters. The gear consists of a conical bag net fixed in flowing water to intercept and capture shrimps and small fish transported by tidal currents. The nets are supported by 30–100 wooden stakes firmly anchored to the substrate to maintain gear stability and withstand the force of water currents. During fishing operations, approximately 3–10 stake nets are deployed from a single boat, depending on the size and spatial extent of the Paadu fishing ground (Fig. 7, 8, 9; Table 5).

Fishing operations generally commence in the late afternoon, with stake nets being set between 16:00 hrs and 18:30 hrs. Following deployment, the nets are allowed to fish for approximately two hours before being hauled. The nets are then reset and hauled again after a similar soaking period of about two hours. This cycle

Fig. 7. Stake nets arranged on fishing boats before deployment in the Paadu fishery of Ennore Creek

Fig. 8. Stake net installation in a Paadu fishing ground during the late evening before overnight fishing operations

Fig. 9. Lateral view of a stake net installation showing the arrangement of stakes and net in a Paadu fishing ground of Ennore Creek

Table 5. Details of fishing operation under the Paadu system in Mugathuvara Kuppam and Kattu Kuppam villages

Parameter	Mugathuvara Kuppam	Kattu Kuppam
Fishing method	Stake net fishery	Stake net fishery
Time of departure from landing centre	14:00 hrs	12:00 hrs
Time of reaching fishing grounds	At or before 17:00 hrs	At or before 17:00 hrs
Net-setting time	Around 18:30 hrs	Around 16:00–17:00 hrs
Net-hauling time	Around 20:30 hrs	Around 19:30 hrs
Frequency of stake net setting	3–4 times per Paadu	3–4 times per Paadu
Duration of fishing operation	10–12 hrs	10–12 hrs
Return to fish landing centre	04:00–06:00 hrs	02:00–06:00 hrs
Average catch per boat per Paadu	Around 20 kg	Around 20 kg

of setting and hauling is repeated throughout the night until the early morning hours. Consequently, each Paadu is typically operated 3–4 times per night, resulting in an average fishing duration of 10–12 h. In addition to the primary stake nets, Tadukku valai is deployed as an auxiliary fishing gear. This net is installed between adjacent stake nets to prevent escape of shrimps through gaps between the nets, thereby enhancing the overall efficiency of the fishing operation. The combined use of stake nets and Tadukku valai improves shrimp retention and increases catch effectiveness within the Paadu fishing system.

The Paadu fishery primarily targets shrimp species, yielding an average catch of approximately 20 kg per Paadu per boat per fishing operation. Based on fishers' estimates, the monthly catch was approximately 23.4 t in Mugathuvara Kuppam and 27.3 t in Kattu Kuppam. Although shrimps constitute the principal target group, the fishery also harvests a variety of estuarine and coastal species. The major species recorded include shrimps, crabs, mullets, tilapia, catfishes, snappers, groupers, ladyfishes, surgeon fishes, and triggerfishes (Table 6). Local fishers also reported seasonal variations in species occurrence. Overall, the catch composition is dominated by shrimps, whereas finfishes contribute only a minor proportion of the total catch obtained through stake net operations.

Table 6. Major species encountered in the Ennore Creek stake net fishery

Group	Scientific name	Common name	Size Range (TL/CW)
Shellfish			
	Penaeus (Fenneropeneus) indicus	Indian white shrimp	10– 14 cm TL
	Penaeus (Penaeus) monodon	Giant tiger shrimp	15–17 cm TL
	Penaeus (Fenneropenaeus) merguiensis	Banana shrimp	8–14 cm TL
	Scylla serrata	Mud crab	4.6–11.5 cm CW
Finfish			
	Mugil cephalus	Flathead grey mullet	15– 40 cm TL
	Oreochromis mossambicus	Mozambique tilapia	10–20 cm TL
	Lutjanus fulviflamma	Black spot snapper	20–25 cm TL
	Lates calcarifer	Asian seabass	20 to 45cm TL
	Gerres oyena	Blacktip silver biddy	10 to 15cm TL
	Elops machnata	Ladyfish	15–30cm TL
	Chanos chanos	Milkfish	20–30 cm TL

Reported size ranges are based on fishers' observations and do not represent systematic measurements collected during the present study.

Discussion

This study provides the first systematic documentation of the Paadu fishing system practised in Ennore Creek, thereby contributing new empirical evidence to the literature on community based fisheries management (CBFM) in small scale fisheries. Although Paadu systems have been extensively documented in Pulicat Lake and the backwaters of Kerala (Mathew, 1991; Lobe and Berkes, 2004), their structure, operation, and governance in Ennore Creek have not previously been examined in detail. The present findings demonstrate that the Ennore Paadu system retains key principles of customary fisheries governance, including spatial demarcation of fishing grounds, rotational access arrangements, and community based enforcement mechanisms. These characteristics are widely recognised as essential components for the sustainable management of common pool resources (Ostrom, 1990; Steenbergen *et al*., 2022).

The division of Ennore Creek into approximately 60 Paadu fishing grounds and the allocation of only one boat per Paadu on a fishing day represent an effective local mechanism for regulating fishing

effort and reducing conflicts among fishers. Similar systems of spatial allocation and rotational access have been reported from Pulicat Lake and other traditional fisheries, where they contribute to equitable resource sharing and long-term sustainability (Lobe and Berkes, 2004). The annual raffle system, clearly defined operational rules and locally accepted penalties further strengthen compliance and social cohesion, demonstrating the effectiveness of customary institutions in managing fisheries resources without extensive external regulation.

Participation in the Paadu system is structured according to fishing gear type rather than social exclusion. While Mugathuvara Kuppam and Kattu Kuppam villages participate in stake net based Paadu fishing, fishers from Shivanpadai Kuppam primarily rely on cast-net fishing and therefore operate outside the Paadu allocation framework. Similar gear based access arrangements have been documented in other lagoon and estuarine fisheries, where fixed fishing gears require exclusive spatial rights, whereas mobile gears permit more flexible access to fishing grounds (Mathew, 1991; Fabinyi, 2024). Such arrangements reduce gear conflicts and enable multiple fishing strategies to coexist within the same ecosystem.

The presence of multiple stake net variants, including Suthu valai, Konda valai, Thoori valai, and the auxiliary net, Tadukku valai, reflects the importance of traditional ecological knowledge and local innovation in adapting fishing practices to environmental conditions. Variations in gear design and deployment are closely linked to tidal currents, water depth, and shrimp availability. Such adaptations illustrate how fishers continuously modify their practices to optimise catch efficiency while maintaining the operational principles of the Paadu system. Similar observations have been reported from other traditional fisheries where local ecological knowledge plays a central role in resource utilisation and governance (Berkes, 2012).

The fishery is predominantly shrimp based, with an average catch of approximately 20 kg per Paadu per boat per fishing operation. The catch is dominated by shrimps, while finfishes constitute a relatively small proportion of the total catch. Species such as mullets, tilapia, catfishes, crabs, snappers, groupers, and ladyfishes were also encountered, indicating the ecological connectivity of Ennore Creek with adjacent estuarine and coastal ecosystems. The diversity of species recorded highlights the ecological importance of the creek as a nursery, feeding, and migration habitat for commercially important aquatic organisms. Furthermore, the marketing of catches through local markets as Thazhan Kuppam and larger regional markets as Kasimedu Fishing Harbour demonstrate the economic significance of the fishery. The involvement of fisherwomen in fish marketing further emphasises the contribution of the fishery to household income and livelihood security.

Despite its institutional effectiveness, the sustainability of the Paadu fishing system is increasingly threatened by environmental degradation. Fishers identified the rapid spread of the invasive charru mussel, *Mytella strigata*, as one of the most significant emerging threats to the fishery. Dense aggregations of the mussel create physical obstructions that hinder boat navigation and fishing operations. It may compete with native filter feeding organisms for food resources and potentially alter plankton availability within the estuary. The proliferation of this invasive species, therefore, represents both an ecological and socioeconomic challenge for fishing communities dependent on the creek.

In addition to biological invasions, fishers expressed concerns regarding industrial pollution, oil contamination, thermal effluents from nearby power plants, drainage inputs from the Buckingham Canal, and increasing siltation within the creek. These factors are perceived to contribute to declining water quality, habitat degradation, reduced fishery productivity, and the abandonment of several Paadu fishing grounds. Similar environmental pressures have been reported from other urbanised estuarine ecosystems, where pollution and habitat modification have negatively affected fisheries production and biodiversity. Unlike fishing effort, which can be regulated through customary governance systems, these environmental stressors originate from external sources and remain largely beyond the control of local fishing communities.

Recent global assessments emphasise that although customary institutions can effectively regulate access and fishing effort, their long-term success depends on supportive environmental policies and integration with higher-level governance frameworks (FAO, 2015; Basurto *et al.,* 2025). The GPS-based participatory mapping of Paadu fishing grounds undertaken in the present study provides an important baseline for documenting customary spatial rights and supporting future participatory fisheries management initiatives. Fishers also highlighted the need for government intervention to control the spread of *M. strigata*, undertake periodic dredging to reduce siltation, and provide essential infrastructure such as a net-mending hall for Kattu Kuppam village. Addressing these concerns through collaborative management approaches would not only enhance the resilience of the Paadu system but also contribute to the conservation of Ennore Creek and the sustainability of fisheries-dependent livelihoods.

Overall, the Paadu fishing system of Ennore Creek represents a successful example of community based fisheries governance that combines traditional ecological knowledge, equitable resource allocation, and local enforcement mechanisms (FAO, 2024; Gammage *et al.,* 2025). However, the future sustainability of the system will depend on effective environmental management, recognition of customary fishing rights, and targeted policy interventions aimed at mitigating pollution, controlling invasive species, and restoring critical estuarine habitats.

Acknowledgements

The authors express their sincere gratitude to the traditional fishers of Ennore Creek for their cooperation and valuable support during the fieldwork. Special thanks are extended to Mr. Kumaresan of Kattu Kuppam, Mr. Rajkumar of Mugathuvara Kuppam, and Mr. Ravichandran of Shivanpadai Kuppam for sharing their local knowledge and providing assistance throughout the study. The authors also acknowledge the support and guidance of Dr. R. Jeya Shakila and Mr. R. Velmurugan of Dr. M.G.R. Fisheries College and Research Institute, Ponneri, whose encouragement and academic guidance were instrumental in completing this work.

References

Basurto, X., Gutierrez, N. L., Franz, N., Mancha-Cisneros, M. del Mar, Gorelli, G., Aguión, A., Funge-Smith, S., Harper, S., Mills, D. J., Nico, G., Tilley, A., Vannuccini, S., Virdin, J., Westlund, L., Allison, E. H., Anderson, C. M., Baio, A., Cinner, J., Fabinyi, M., Hicks, C. C., Kolding, J., Melnychuk, M. C., Ovando, D., Parma, A. M., Robinson, J. P. W. and Thilsted, S. H. 2025. Illuminating the multidimensional contributions of small-scale fisheries. *Nature*, 637(8047): 875–884. https://doi.org/10.1038/s41586-024-08448-z.

Berkes, F. 2012. *Sacred ecology,* 3rd edn. Routledge, New York, USA. https://doi.org/10.4324/9780203123843.

Coulthard, S. 2011. More than just access to fish: The pros and cons of fisher participation in a customary marine tenure (padu) system under pressure. *Mar. Policy*, 35(3): 405–412. https://doi.org/10.1016/j.marpol.2010.11.006.

Fabinyi, M. 2024. Small-scale fisheries, large-scale fisheries and fisheries governance in the Philippines. *J. Environ. Pol. Plan.,* 26(2): 159–172. https://doi.org/10.1080/ 1523908X.2024.2314451.

FAO. 2015. *Voluntary guidelines for securing sustainable small-scale fisheries in the context of food security and poverty eradication*. Food and Agriculture Organization of the United Nations, Rome, Italy. https://openknowledge.fao.org/handle/20.500.14283/i4356en.

FAO 2024. *Small-scale fisheries governance*. Food and Agriculture Organization of the United Nations, Rome, Italy. https://doi.org/10.4060/cc9784en.

Frawley, T. H., Gonzalez-Mon, B., Nenadovic, M., Gladstone, F., Nomura, K., Zepeda-Domínguez, J. A., Rodriguez-Van Dyck, S., Ferrer, E. M., Torre, J., Micheli, F., Leslie, H. M. and Basurto, X. 2024. Self-governance mediates small-scale fishing strategies, vulnerability and adaptive response. *Glob. Environ. Change*, 84: 102805. https://doi.org/10.1016/j.gloenvcha.2024.102805.

Gammage, T., Gurney, G. G., Diedrich, A. and Dudayev, R. 2025. Equity through co-management in small-scale fisheries: A review. *Fish Fish.,* 26(4), 425–443. https://doi.org/ 10.1111/faf.12889.

Hamelin, K. M., Charles, A. T. and Bailey, M. 2024. Community knowledge as a cornerstone for fisheries management. *Ecol. Soc.*, 29(1): 26. https://doi.org/10.5751/ES-14552-290126.

Iwasaki, S. 2014. Driving forces of the long-enduring institutional mechanism of the padu system in Negombo Lagoon, Sri Lanka. *Mar. Policy*, 50: 190–196. https://doi.org/ 10.1016/j.marpol.2014.06.015.

Lobe, K. and Berkes, F. 2004. The padu system of community-based fisheries management: Change and local institutional innovation in south India. *Mar. Policy*, 28(3): 271–281. https://doi.org/ 10.1016/S0308-597X(03)00087-1.

Mathew, S. 1991. *Study of territorial use rights in small-scale fisheries: Traditional systems of fisheries management in Pulicat Lake, Tamil Nadu, India. FAO Fisheries Circular No. 839*. Food and Agriculture Organisation of the United Nations, Rome, Italy.

Ostrom, E. 1990. *Governing the commons: The evolution of institutions for collective action*. Cambridge University Press, Cambridge, UK. https://doi.org/10.1017/CBO9780511807763.

Rajagopalan, R. 2012. Pulicat's padu system: Growing resource scarcity in India's Pulicat Lake region is not only putting a strain on the traditional system of fisheries management but also raising vital questions about gender equity in the community. *Yemaya Newsletter, ICSF*, 39: 7–8.

Rajkumar, J. S. I., Milton, M. C. John and Ambrose, T. 2011. Seasonal variation of water quality parameters in Ennore Estuary with respect to industrial and domestic sewage. *Int. J. Curr. Res.*, 3(3): 209-218.

Steenbergen, D. J., Song, A. M. and Andrew, N. 2022. A theory of scaling for community-based fisheries management. *Ambio,* 51(3): 666-677. https://doi.org/10.1007/s13280-021-01563-5.